AVERY DENNISON | Fastener Solutions

Standard Fasteners Marketing Specifications

For the following part numbers:
06214-0
06215-0
08035-0
08901-2
08902-2
08948-0
08949-0
08951-0
08952-0
08954-0
08962-0
08965-0
08966-0
08968-0
08969-0
08970-0
08986-0
08987-0
08989-0
10417-0
10656-0
10657-0
10658-0
10659-0
10697-0
10703-0
10704-0
11018-0
11081-0
11084-0
11088-0
11089-0
11240-0
11241-0
17200-0
17201-0
17202-0
17203-0
17204-0
17205-0
17208-0
17210-0
02161 (Europe)
02160 (Europe)
04271 (Europe)
04221 (Europe)

July 18, 2019

AVERY DENNISON MARKETING SPECIFICATION

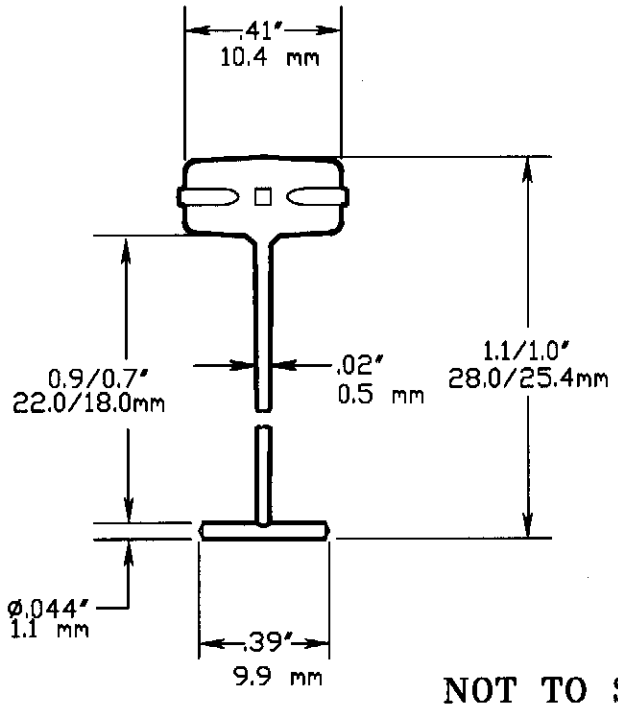

TOLERANCES: IN.= ± .030 in
MM = ± 0.7 mm

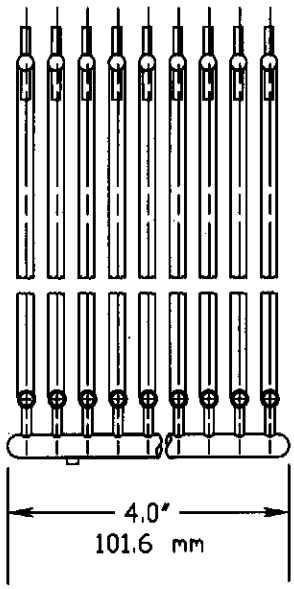

NOT TO SCALE

NOMINAL TENSILE STRENGTH:	4.5/5.5 LBSF / 2.0/2.5 KGF
MATERIAL:	POLYPROPYLENE - NATURAL
WEIGHT:	.05 GRAMS/EACH
CLIP QUANTITY:	50
APPLICATION TOOL:	10651 MARK III PISTOL GRIP 08945 STANDARD SCISSOR-GRIP MARK II HAND TOOL (CONTACT LOCAL SALES PERSON FOR INFORMATION ON POWERED EQUIPMENT)
PACKAGED IN:	5000/CTN, 50,000/CASE
T/F CONN PADDLES :	YES

AVERY DENNISON
FASTENER DIVISION
FITCHBURG, MA 01420 U.S.A.
TEL. 1-800-225-5913
MA. 978-353-8157

DESCRIPTION:

1" (20mm) SWIFTACH®, GP PADDLE

APPROVAL:

1-30-09

STOCK NO. 06214

REV F

AVERY DENNISON MARKETING SPECIFICATION

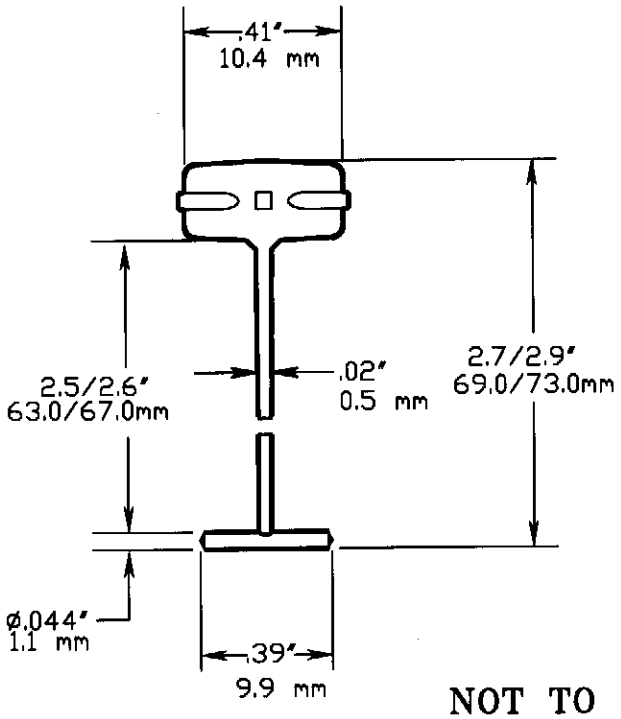

TOLERANCES: IN.= ± .030 In
MM = ± 0.7 mm

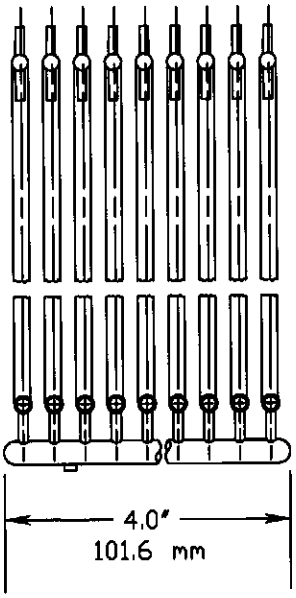

NOT TO SCALE

NOMINAL TENSILE STRENGTH:	4.5/5.5 LBSF / 2.0/2.5 KGF
MATERIAL:	POLYPROPYLENE - NATURAL
WEIGHT:	.054 GRAMS/EACH
CLIP QUANTITY:	50
APPLICATION TOOL:	10651 MARK III PISTOL GRIP 08945 STANDARD SCISSOR-GRIP MARK II HAND TOOL (CONTACT LOCAL SALES PERSON FOR INFORMATION ON POWERED EQUIPMENT)
PACKAGED IN:	5000/CTN, 50,000/CASE
T/F CONN PADDLES :	YES

AVERY DENNISON
FASTENER DIVISION
FITCHBURG, MA 01420 U.S.A.
TEL. 1-800-225-5913
MA. 978-353-8157

DESCRIPTION:

3" (65mm) SWIFTACH®, GP PADDLE

APPROVAL: 1-30-09

STOCK NO. 06215

REV D

AVERY DENNISON MARKETING SPECIFICATION

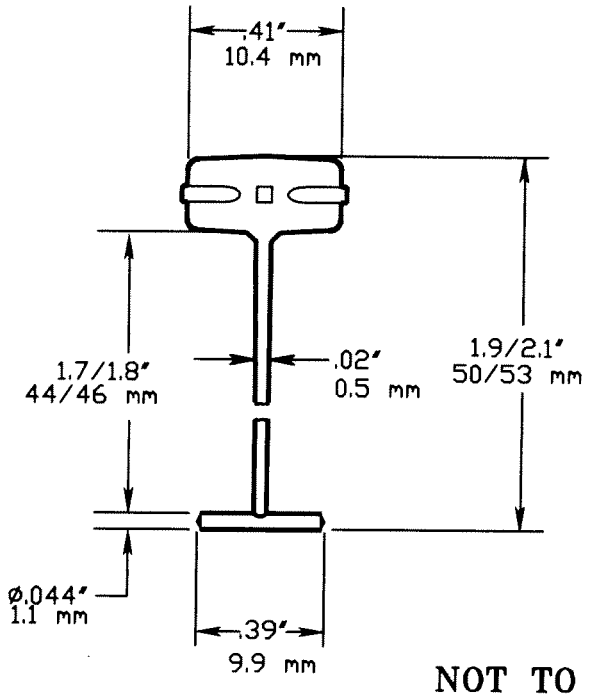

TOLERANCES: IN.= ± .030 in
MM = ± 0.7 mm

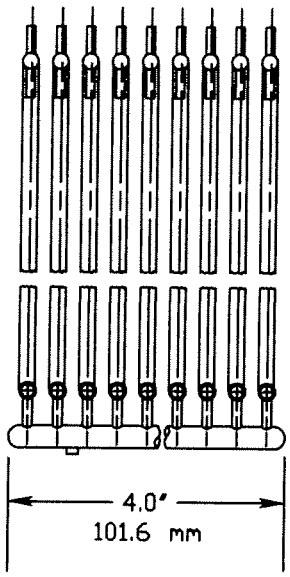

NOT TO SCALE

NOMINAL TENSILE STRENGTH:	4.5/5.5 LBSF / 2.0/2.5 KGF
MATERIAL:	POLYPROPYLENE - NATURAL
WEIGHT:	.054 GRAMS/EACH
CLIP QUANTITY:	50
APPLICATION TOOL:	10651 MARK III PISTOL GRIP 08945 STANDARD SCISSOR-GRIP MARK II HAND TOOL (CONTACT LOCAL SALES PERSON FOR INFORMATION ON POWERED EQUIPMENT)
PACKAGED IN:	5000/CTN, 50,000/CASE
T/F CONN PADDLES :	YES

AVERY DENNISON
FASTENER DIVISION
FITCHBURG, MA 01420 U.S.A.
TEL. 1-800-225-5913
MA. 978-353-8157

DESCRIPTION:

45mm SWIFTACH® PADDLE

APPROVAL:

7-30-10

STOCK NO. 08035

REV D

AVERY DENNISON MARKETING SPECIFICATION

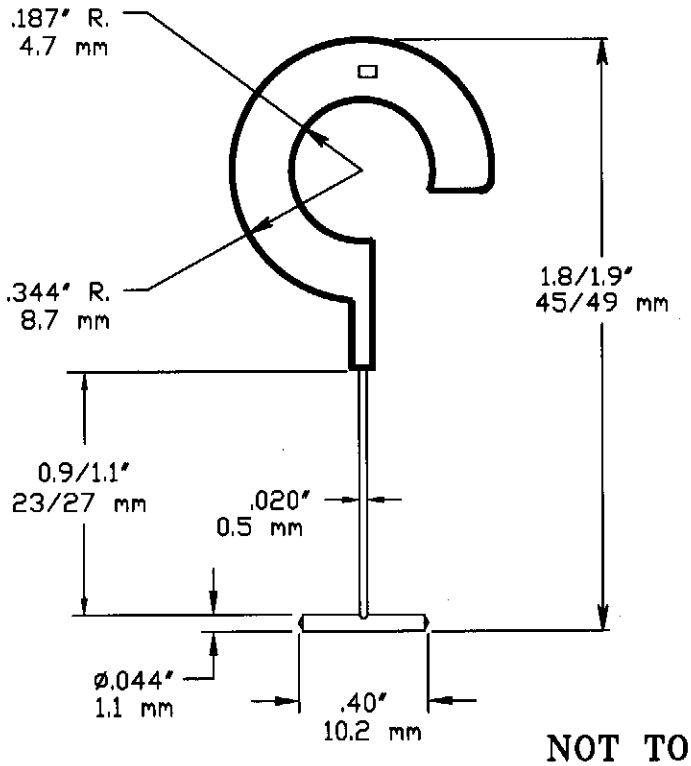

TOLERANCES: IN.= ± .030 in
MM = ± 0.7 mm

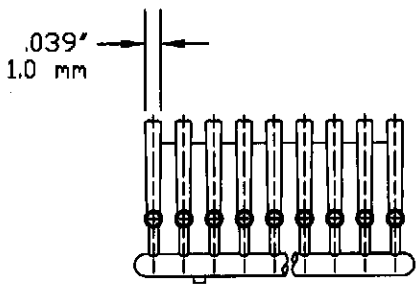

NOT TO SCALE

NOMINAL TENSILE STRENGTH:	3/5 LBSF.
MATERIAL:	POLYPROPYLENE - NATURAL
CLIP QUANTITY:	50
APPLICATION TOOL:	08945 STANDARD SCISSOR-GRIP MARK II HAND TOOL (CONTACT LOCAL SALES PERSON FOR INFORMATION ON POWERED EQUIPMENT)
PACKAGED IN:	5000/CTN, 50,000/CASE
T/F CONN PADDLES:	YES

AVERY DENNISON
FASTENER DIVISION
FITCHBURG, MA 01420 U.S.A.
TEL. 1-800-225-5913
MA. 978-353-8157

DESCRIPTION:

1" (25mm) SWIFTACH®,GP HOOKS

APPROVAL: 3-3-09

STOCK NO. 08901-2

REV B

AVERY DENNISON MARKETING SPECIFICATION

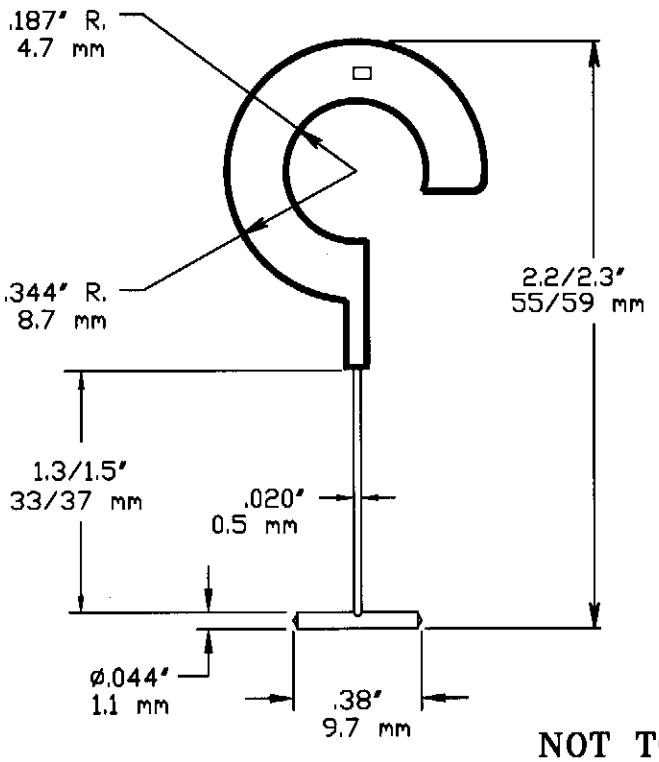

TOLERANCES: IN.= ± .030 In
MM = ± 0.7 mm

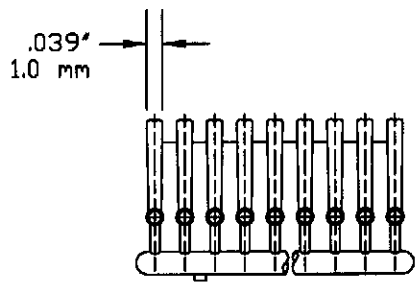

NOT TO SCALE

NOMINAL TENSILE STRENGTH:	3/5 LBSF.
MATERIAL:	POLYPROPYLENE - NATURAL
CLIP QUANTITY:	50
APPLICATION TOOL:	08945 STANDARD SCISSOR-GRIP MARK II HAND TOOL (CONTACT LOCAL SALES PERSON FOR INFORMATION ON POWERED EQUIPMENT)
PACKAGED IN:	5000/CTN, 50,000/CASE
T/F CONN PADDLES:	YES

AVERY DENNISON
FASTENER DIVISION
FITCHBURG, MA 01420 U.S.A.
TEL. 1-800-225-5913
MA. 978-353-8157

DESCRIPTION:

1.38" (35mm) SWIFTACH®,GP HOOKS

APPROVAL: 3-3-09

STOCK NO. 08902-2

REV B

AVERY DENNISON MARKETING SPECIFICATION

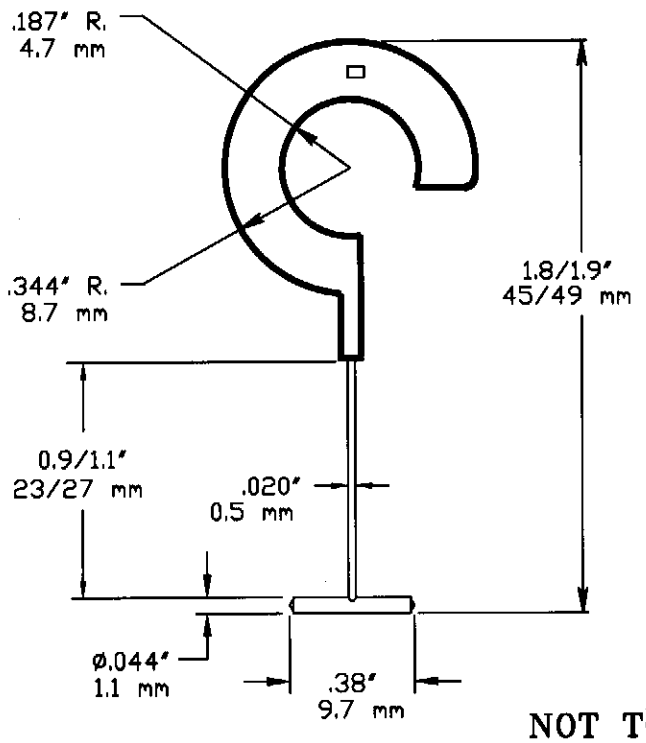

TOLERANCES: IN.= ± .030 in
MM = ± 0.7 mm

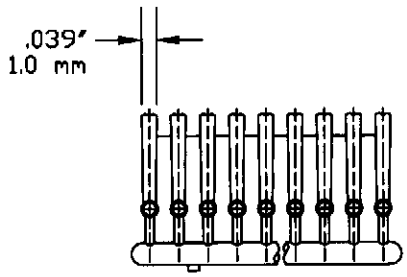

NOT TO SCALE

NOMINAL TENSILE STRENGTH:	5/7 LBSF.
MATERIAL:	NYLON 6 - NATURAL
CLIP QUANTITY:	50
APPLICATION TOOL:	08945 STANDARD SCISSOR-GRIP MARK II HAND TOOL (CONTACT LOCAL SALES PERSON FOR INFORMATION ON POWERED EQUIPMENT)
PACKAGED IN:	5000/CTN, 50,000/CASE
T/F CONN PADDLES	YES

AVERY DENNISON
FASTENER DIVISION
FITCHBURG, MA 01420 U.S.A.
TEL. 1-800-225-5913
MA. 978-353-8157

DESCRIPTION:	APPROVAL: 3-3-09	
1" (25mm) SWIFTACH®,GP HOOKS	STOCK NO. 08903-2	REV B

AVERY DENNISON MARKETING SPECIFICATION

TOLERANCES IN. =± .030 IN.
MM =± 0.7 mm

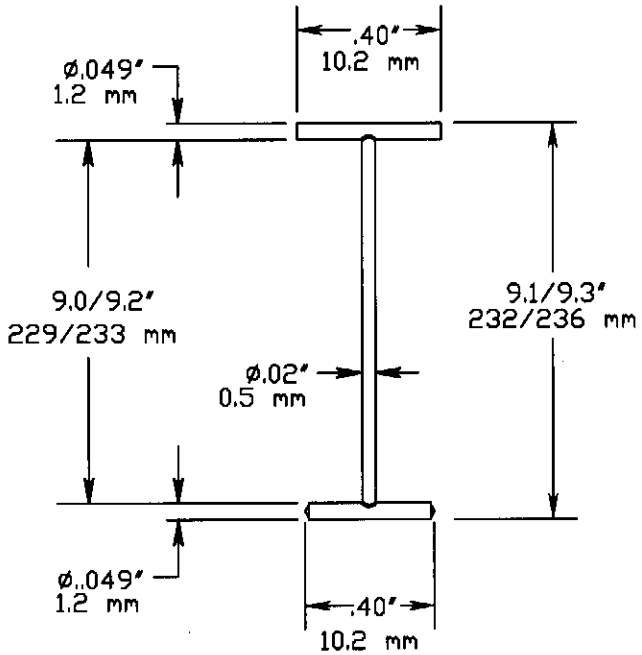

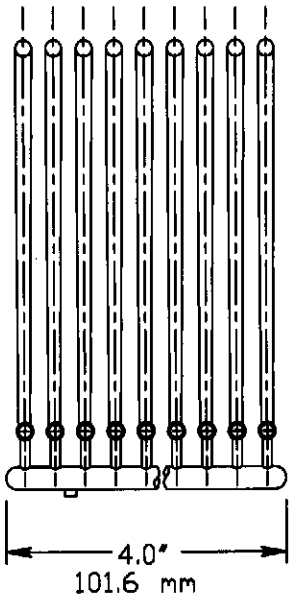

NOT TO SCALE

NOMINAL TENSILE STRENGTH:	5/7 LBSF / 2.3/3.2 KGF
MATERIAL:	NYLON: TYPE 6 - NATURAL
WEIGHT/FASTENER:	.00289 oz. / .085 grams
CLIP QUANTITY:	50
APPLICATION TOOL:	10651 MARK III PISTOL GRIP 08945 STANDARD SCISSOR-GRIP MARK II HAND TOOL (CONTACT LOCAL SALES PERSON FOR INFORMATION ON POWERED EQUIPMENT)
PACKAGED IN:	5,000/CTN., 50,000/CASE
T/F CONN. PADDLES	YES

AVERY DENNISON
FASTENER DIVISION
FITCHBURG, MA 01420 U.S.A.
TEL. 1-800-225-5913
FAX. 1-800-848-2169

DESCRIPTION:

9" (231mm) Swiftach® HD T-End

APPROVAL:

1-30-09

STOCK NO. 08948

REV K

AVERY DENNISON MARKETING SPECIFICATION

TOLERANCES IN. =± .030 IN.
MM =± 0.7 mm

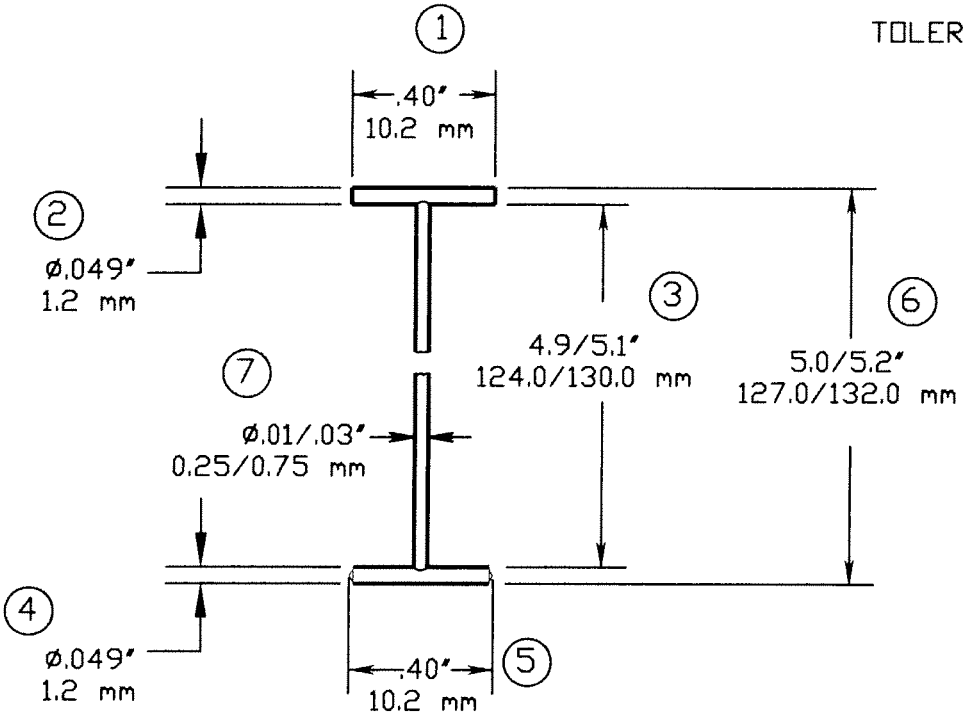

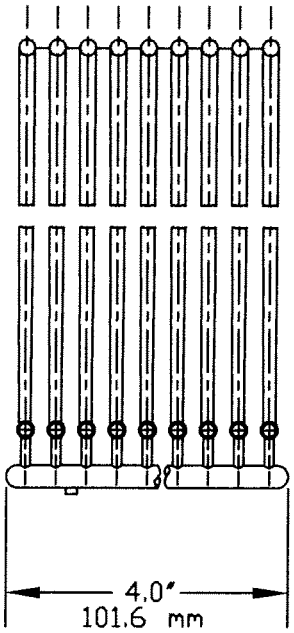

NOT TO SCALE

MIN. APPLIED TENSILE STRENGTH:	5/7 LBSF / 2.3/3.2 KGF
MATERIAL:	NYLON: TYPE 6 - NATURAL
WEIGHT/FASTENER:	.00204 oz. / .060 grams
CLIP QUANTITY:	50
APPLICATION TOOL:	10651 MARK III PISTOL GRIP 08945 STANDARD SCISSOR-GRIP MARK II HAND TOOL (CONTACT LOCAL SALES PERSON FOR INFORMATION ON POWERED EQUIPMENT)
PACKAGED IN:	5000/CTN, 50,000/CASE
T/F CONNECTORS:	YES

AVERY DENNISON

FASTENER DIVISION
FITCHBURG, MA 01420 U.S.A.
TEL. 1-800-225-5913
FAX. 1-800-848-2169

DESCRIPTION:

5" (132mm) Swiftach HD T-End

APPROVALS: Q.A.

5/27/2013

STOCK NO. 08949

REV K

AVERY DENNISON MARKETING SPECIFICATION

TOLERANCES IN. =± .030 IN.
MM =± 0.7 mm

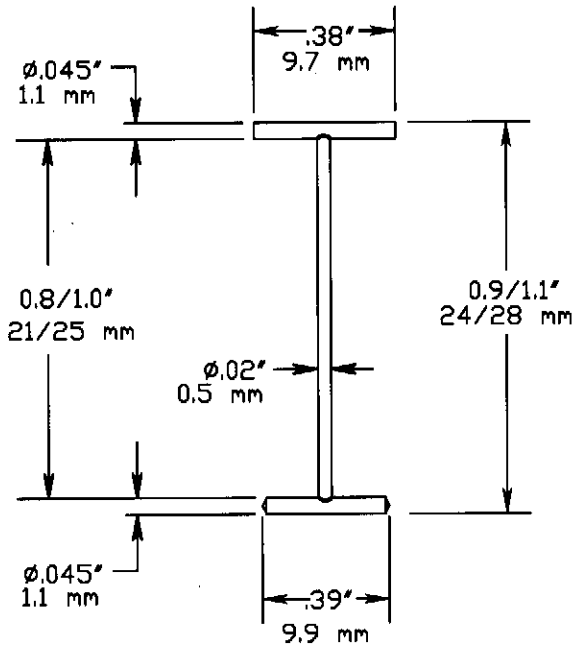

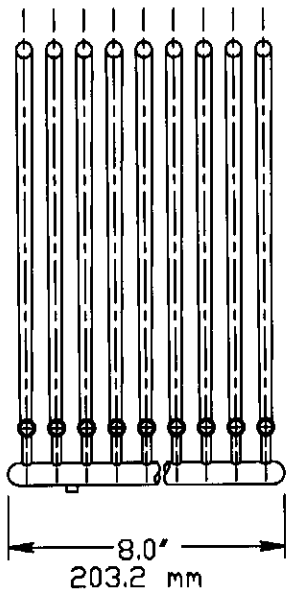

NOT TO SCALE

NOMINAL TENSILE STRENGTH:	5 - 7 LBSF / 2.3 - 3.2 KGF
MATERIAL:	NYLON: TYPE 6 - NATURAL
WEIGHT/FASTENER:	0.0010 oz. / 0.029 grams
CLIP QUANTITY:	100
APPLICATION TOOL:	10651 MARK III PISTOL GRIP 08945 STANDARD SCISSOR-GRIP MARK II HAND TOOL (CONTACT LOCAL SALES PERSON FOR INFORMATION ON POWERED EQUIPMENT)
PACKAGED IN:	5,000/CTN., 50,000/CASE
T/F CONN. PADDLES	YES

AVERY DENNISON
FASTENER DIVISION
FITCHBURG, MA 01420 U.S.A.
TEL. 1-800-225-5913
FAX. 1-800-848-2169

DESCRIPTION:

1" (23mm) Swiftach® HD T-End

APPROVAL:

1-12-09

STOCK NO. 08951

REV L

AVERY DENNISON MARKETING SPECIFICATION

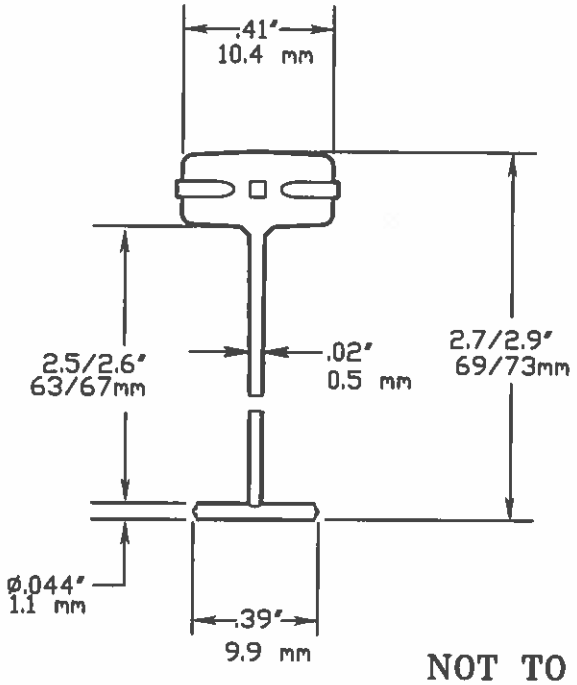

TOLERANCES: IN.= ± .030 in
MM = ± 0.7 mm

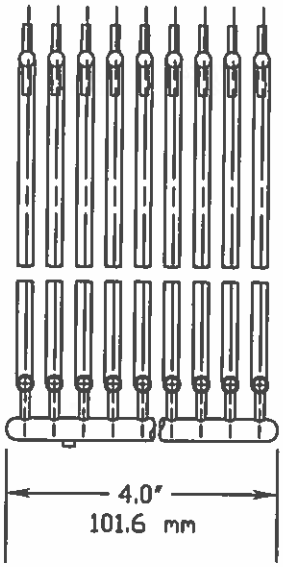

NOT TO SCALE

NOMINAL TENSILE STRENGTH:	4.5/5.5 LBSF / 2.0/2.5 KGF
MATERIAL:	POLYPROPYLENE
WEIGHT:	.054 GRAMS/EACH
CLIP QUANTITY:	50
APPLICATION TOOL:	10651 MARK III PISTOL GRIP 08945 STANDARD SCISSOR-GRIP MARK II HAND TOOL (CONTACT LOCAL SALES PERSON FOR INFORMATION ON POWERED EQUIPMENT)
PACKAGED IN:	5000/CTN, 50,000/CASE
T/F CONN PADDLES :	YES

08952-0	NATURAL
08962-0	DK.BLUE
08965-0	GREEN
08966-0	ORANGE
08968-0	RED
08969-0	YELLOW
08970-0	LT. BLUE
08986-0	BLACK

11240-0	PINK
11241-0	WHITE

AVERY DENNISON
FASTENER DIVISION
FITCHBURG, MA 01420 U.S.A.
TEL. 1-800-225-5913
MA. 978-353-8157

DESCRIPTION:

3" (65mm) SWIFTACH®, PADDLE

APPROVAL: Linda Boyle 6-15-2018

STOCK NO. SEE ABOVE

REV G

AVERY DENNISON MARKETING SPECIFICATION

TOLERANCES IN. =± .030 IN.
MM =± 0.7 mm

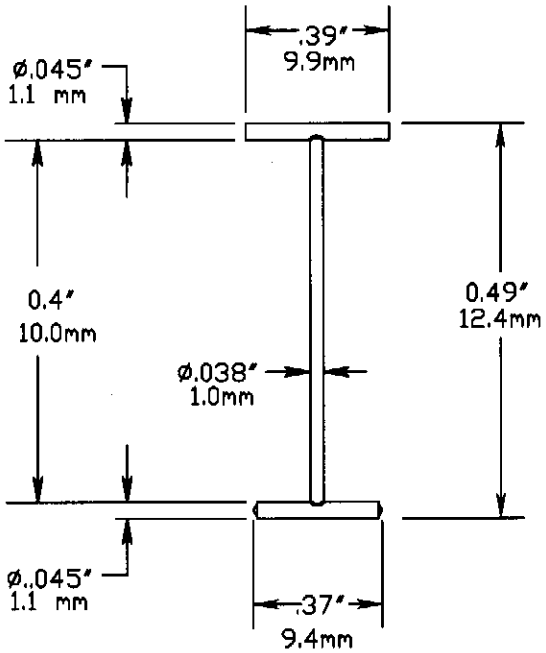

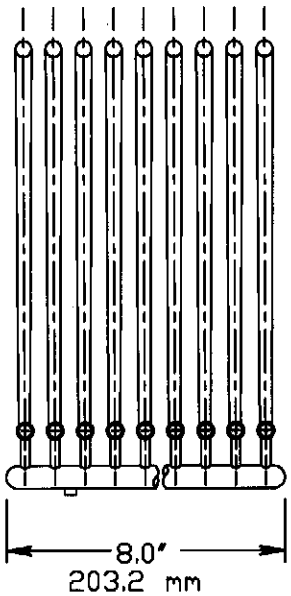

NOT TO SCALE

NOMINAL TENSILE STRENGTH:	5/7 LBSF / 2.3/3.2 KGF
MATERIAL:	NYLON: TYPE 6 - NATURAL
WEIGHT/FASTENER:	0.0010 oz. / 0.029 grams
CLIP QUANTITY:	100
APPLICATION TOOL:	10651 MARK III PISTOL GRIP 08945 STANDARD SCISSOR-GRIP MARK II HAND TOOL (CONTACT LOCAL SALES PERSON FOR INFORMATION ON POWERED EQUIPMENT)
PACKAGED IN:	5,000/CTN., 50,000/CASE
T/F CONN. PADDLES	YES

AVERY DENNISON
FASTENER DIVISION
FITCHBURG, MA 01420 U.S.A.
TEL. 1-800-225-5913
FAX. 1-800-848-2169

DESCRIPTION:	APPROVAL:	
1/2" (10mm) Swiftach® HD T-End	1-30-09	
	STOCK NO. 08954	REV J

AVERY DENNISON MARKETING SPECIFICATION

TOLERANCES: IN.= ± .030 in
MM= ± 0.7 mm

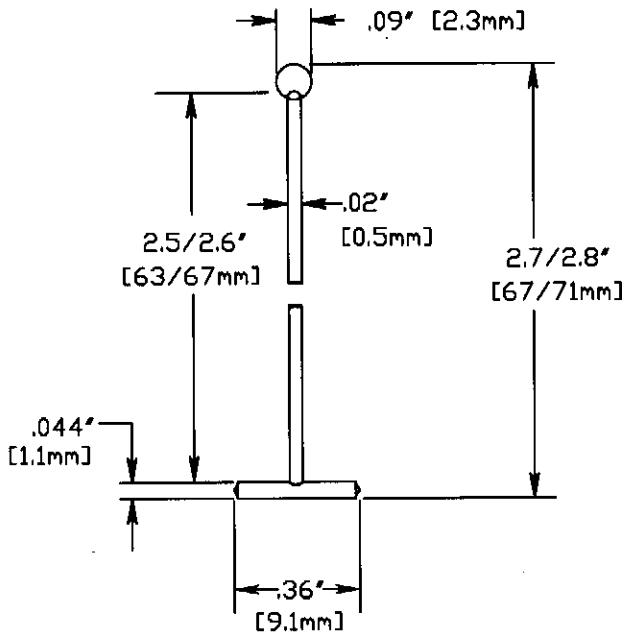

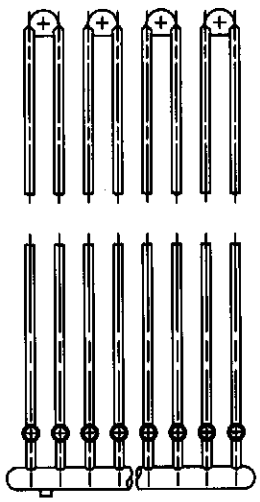

NOT TO SCALE

NOMINAL TENSILE STRENGTH:	5/7 LBSF. / 2.3/3.2 KGF.
MATERIAL:	NYLON 6 - NATURAL
CLIP QUANTITY:	25 LOOPS
APPLICATION TOOL:	08945 - MARK II SCISSOR GRIP 10651 - MARK III PISTOL GRIP SEE SALES SPECIALIST FOR POWER EQUIPMENT OPTIONS.
PACKAGED IN:	5000/CTN., 50,000/CASE
T/F CONN PADDLES	NO

AVERY DENNISON
FASTENER DIVISION
FITCHBURG, MA 01420 U.S.A.
TEL. 1-800-225-5913
FAX. 1-800-848-2169

DESCRIPTION:	APPROVAL:	
3" (65mm) Swiftach Loop	1-30-09	
	STOCK NO. 08989	REV G

AVERY DENNISON MARKETING SPECIFICATION

TOLERANCES: IN.= ± .030 in
MM= ± 0.7 mm

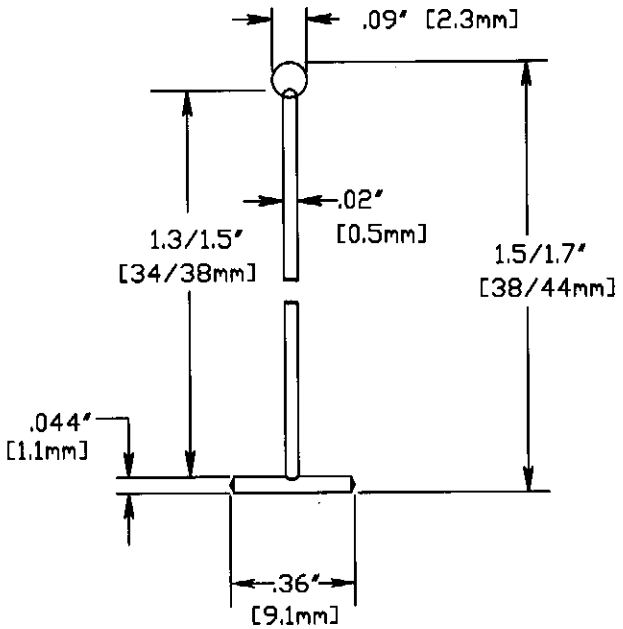

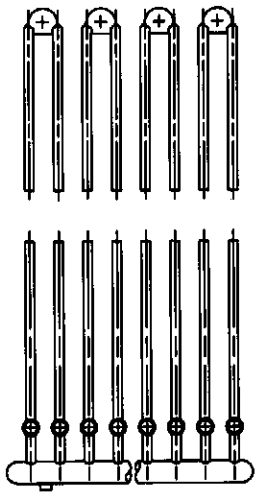

NOT TO SCALE

NOMINAL TENSILE STRENGTH:	5/7 LBSF. / 2.3/3.2 KGF.
MATERIAL:	NYLON 6 - NATURAL
CLIP QUANTITY:	25 LOOPS
APPLICATION TOOL:	08945 - MARK II SCISSOR GRIP 10651 - MARK III PISTOL GRIP SEE SALES SPECIALIST FOR POWER EQUIPMENT OPTIONS.
PACKAGED IN:	5000/CTN., 50,000/CASE
T/F CONN PADDLES	NO

AVERY DENNISON

FASTENER DIVISION
FITCHBURG, MA 01420 U.S.A.
TEL. 1-800-225-5913
FAX. 1-800-848-2169

DESCRIPTION:	APPROVAL: 1-30-09	
1-1/2" (36mm) Swiftach Loop	STOCK NO. 08987	REV G

AVERY DENNISON MARKETING SPECIFICATION

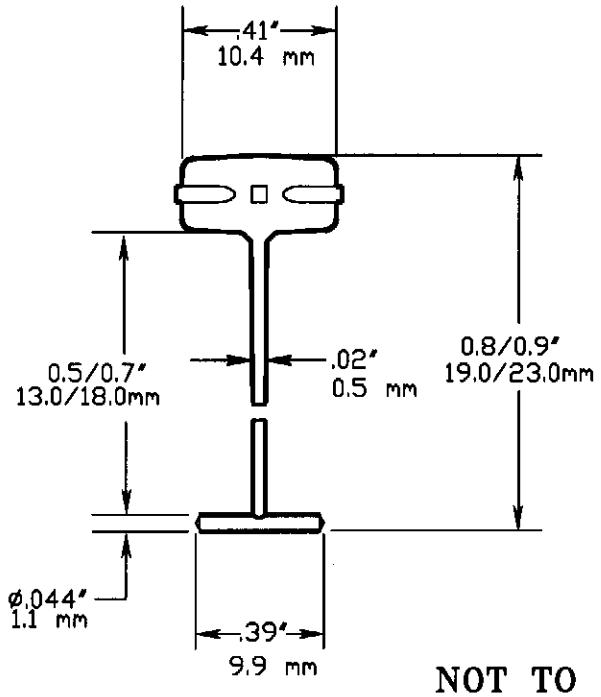

TOLERANCES: IN.= ± .030 in
MM = ± 0.7 mm

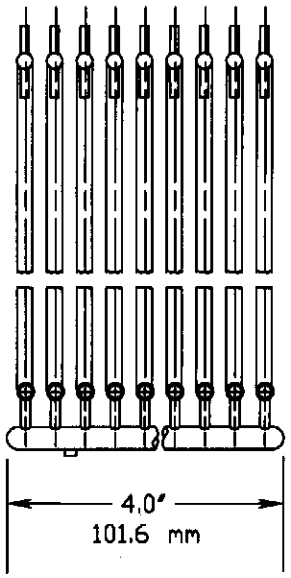

NOT TO SCALE

NOMINAL TENSILE STRENGTH:	3.5/4.5 LBSF / 1.5/2.0 KGF
MATERIAL:	POLYPROPYLENE - NATURAL
WEIGHT:	.05 GRAMS/EACH
CLIP QUANTITY:	50
APPLICATION TOOL:	10651 MARK III PISTOL GRIP 08945 STANDARD SCISSOR-GRIP MARK II HAND TOOL (CONTACT LOCAL SALES PERSON FOR INFORMATION ON POWERED EQUIPMENT)
PACKAGED IN:	5000/CTN, 50,000/CASE
T/F CONN PADDLES :	YES

AVERY DENNISON
FASTENER DIVISION
FITCHBURG, MA 01420 U.S.A.
TEL. 1-800-225-5913
MA. 978-353-8157

DESCRIPTION:

1/2" (50mm) SWIFTACH®, PADDLE

APPROVAL:

1-30-09

STOCK NO. 10417

REV E

AVERY DENNISON MARKETING SPECIFICATION

TOLERANCES IN. =± .030 IN.
MM =± 0.7 mm

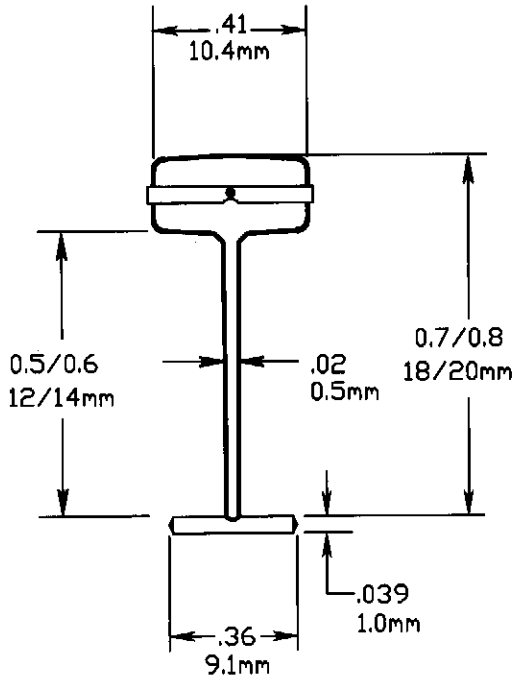

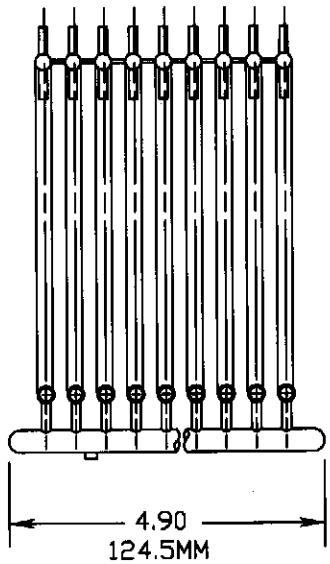

NOT TO SCALE

NOMINAL TENSILE STRENGTH:	4.5/5.5 LBSF. / 2.0/2.5 KGF.
MATERIAL:	POLYPROPYLENE - NATURAL
WEIGHT:	0.035 GRAM
CLIP QUANTITY:	100
APPLICATION TOOL:	10651 MARK III HAND TOOL (CONTACT LOCAL SALES PERSON FOR INFORMATION ON POWERED EQUIPMENT)
PACKAGED IN:	BOX OF 10,000
T/F CONN PADDLES:	YES

AVERY DENNISON

FASTENER DIVISION
FITCHBURG, MA 01420 U.S.A.
TEL. 1-800-225-5913
MA. 978-353-8157

DESCRIPTION:	APPROVAL: Q.A. 1-30-09	
1/2" (13mm) SWIFTACH® PLUS	STOCK NO. 10656	REV D

AVERY DENNISON MARKETING SPECIFICATION

TOLERANCES IN. =± .030 IN.
MM =± 0.7 mm

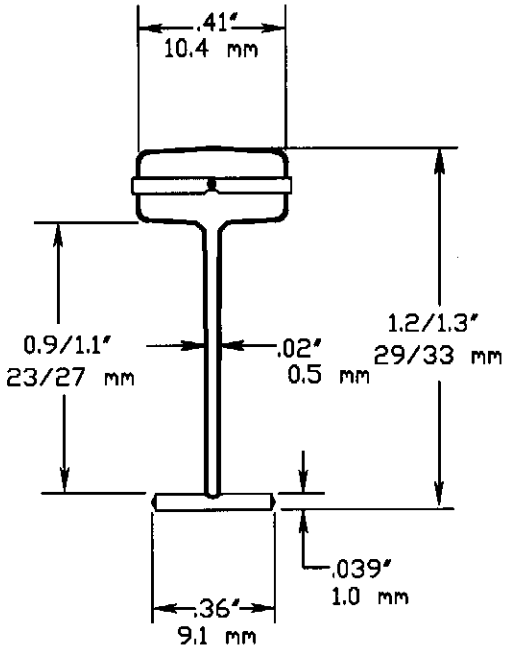

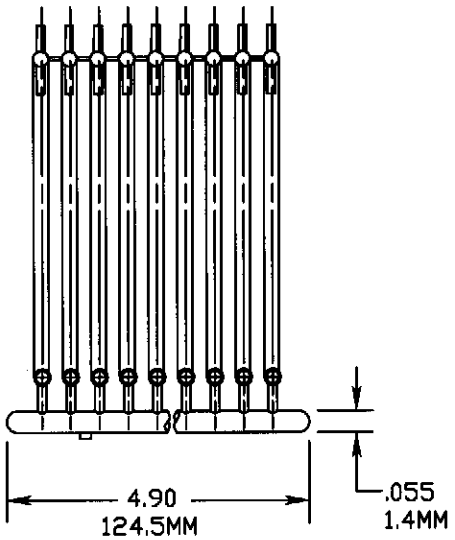

NOT TO SCALE

NOMINAL TENSILE STRENGTH:	4.5 - 5.5 LBSF / 2.0 2.5 KGF
MATERIAL:	POLYPROPYLENE - NATURAL
WEIGHT:	0.035 GRAM
CLIP QUANTITY:	100
APPLICATION TOOL:	10651 MARK III HAND TOOL (CONTACT LOCAL SALES PERSON FOR INFORMATION ON POWERED EQUIPMENT)
PACKAGED IN:	10,000/CTN, 100,000/CASE
T/F CONN PADDLES:	YES

AVERY DENNISON

FASTENER DIVISION
FITCHBURG, MA 01420 U.S.A.
TEL. 1-800-225-5913
MA. 978-353-8157

DESCRIPTION:	APPROVAL:	
1" (25mm) SWIFTACH® PLUS	1-12-09	
	STOCK NO. 10657	REV C

AVERY DENNISON MARKETING SPECIFICATION

TOLERANCES IN. =± .030 IN.
MM =± 0.7 mm

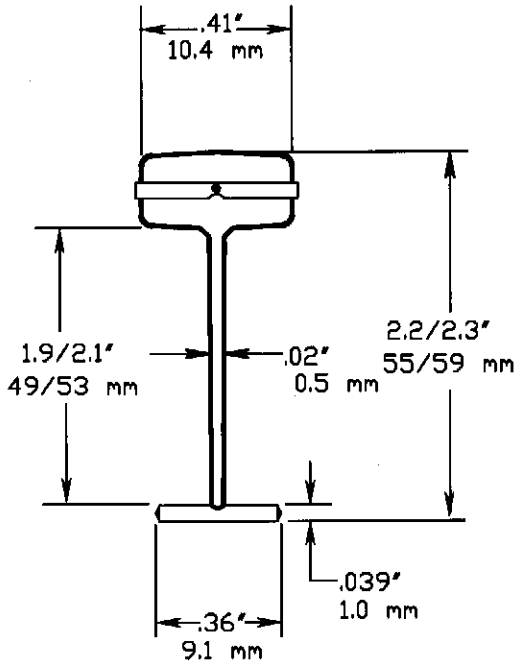

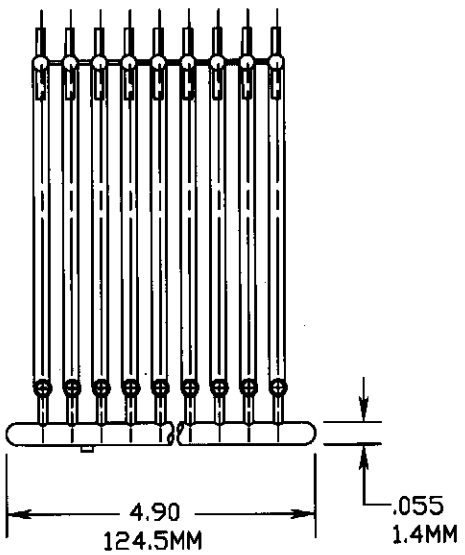

NOT TO SCALE

NOMINAL TENSILE STRENGTH:	4.5 - 5.5 LBSF / 2.0 2.5 KGF
MATERIAL:	POLYPROPYLENE - NATURAL
WEIGHT:	0.046 GRAM
CLIP QUANTITY:	100
APPLICATION TOOL:	10651 MARK III HAND TOOL (CONTACT LOCAL SALES PERSON FOR INFORMATION ON POWERED EQUIPMENT)
PACKAGED IN:	10,000/CTN, 100,000/CASE
T/F CONN PADDLES:	YES

AVERY DENNISON

FASTENER DIVISION
FITCHBURG, MA 01420 U.S.A.
TEL. 1-800-225-5913
MA. 978-353-8157

DESCRIPTION:	APPROVAL:	
2" (51mm) SWIFTACH® PLUS	1-12-09	
	STOCK NO. 10658	REV C

AVERY DENNISON MARKETING SPECIFICATION

TOLERANCES IN. =± .030 IN.
MM =± 0.7 mm

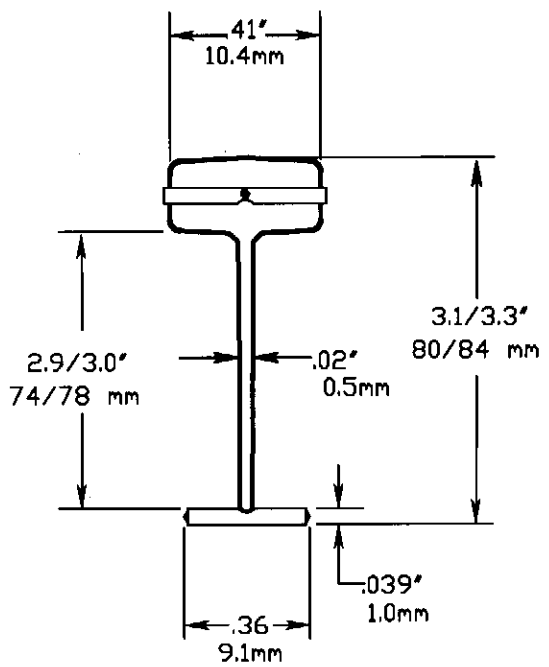

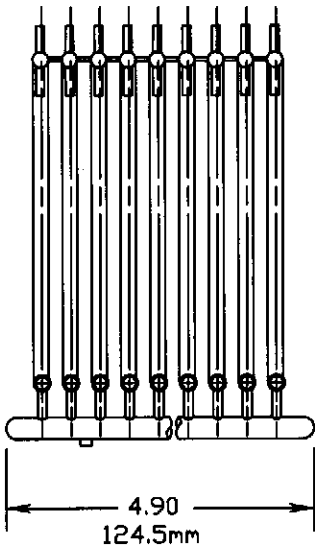

NOT TO SCALE

NOMINAL TENSILE STRENGTH:	4.5 - 5.5 LBSF / 2.0 - 2.5 KGF
MATERIAL:	POLYPROPYLENE - NATURAL
WEIGHT:	0.048 GRAM
CLIP QUANTITY:	100
APPLICATION TOOL:	10651 MARK III HAND TOOL (CONTACT LOCAL SALES PERSON FOR INFORMATION ON POWERED EQUIPMENT)
PACKAGED IN:	10,000/CTN, 100,000/CASE
T/F CONN PADDLES:	YES

AVERY DENNISON

FASTENER DIVISION
FITCHBURG, MA 01420 U.S.A.
TEL. 1-800-225-5913
MA. 978-353-8157

DESCRIPTION:	APPROVAL: 1-12-09	
3" (76mm) SWIFTACH® PLUS	STOCK NO. 10659	REV C

AVERY DENNISON MARKETING SPECIFICATION

TOLERANCES IN. =± .030 IN.
MM =± 0.7 mm

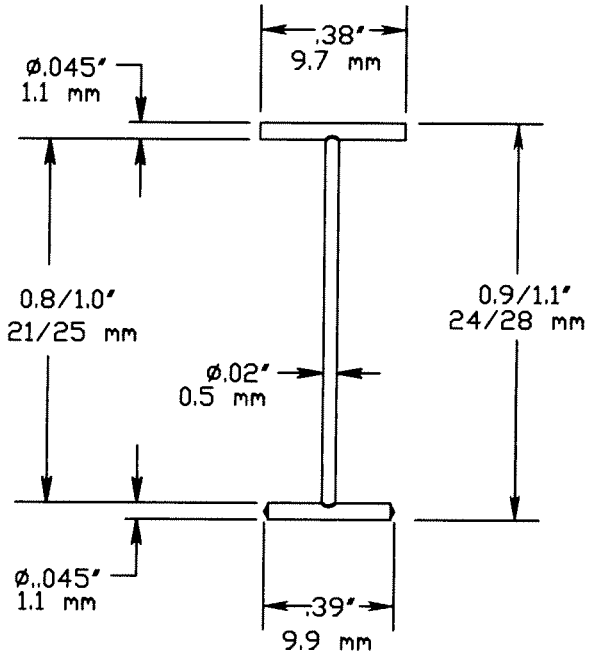

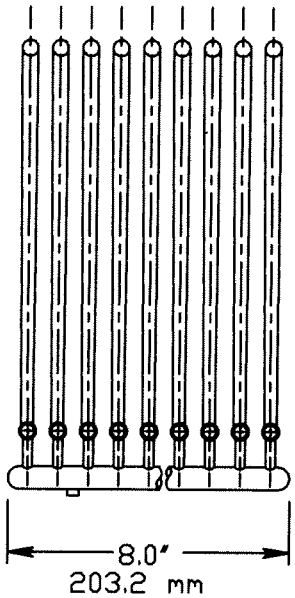

NOT TO SCALE

NOMINAL TENSILE STRENGTH:	5/7 LBSF / 2.3/3.2 KGF
MATERIAL:	NYLON: TYPE 6 - NATURAL
WEIGHT/FASTENER:	0.0010 oz. / 0.029 grams
CLIP QUANTITY:	100
APPLICATION TOOL:	10651 MARK III PISTOL GRIP 08945 STANDARD SCISSOR-GRIP MARK II HAND TOOL (CONTACT LOCAL SALES PERSON FOR INFORMATION ON POWERED EQUIPMENT)
PACKAGED IN:	5,000/CTN., 50,000/CASE
T/F CONN. PADDLES	NO

AVERY DENNISON
FASTENER DIVISION
FITCHBURG, MA 01420 U.S.A.
TEL. 1-800-225-5913
FAX. 1-800-848-2169

DESCRIPTION:

1" (23mm) Swiftach® HD T-End

APPROVAL:

7-30-10

STOCK NO. 10697

REV D

AVERY DENNISON MARKETING SPECIFICATION

TOLERANCES IN. =± .030 IN.
MM =± 0.7 mm

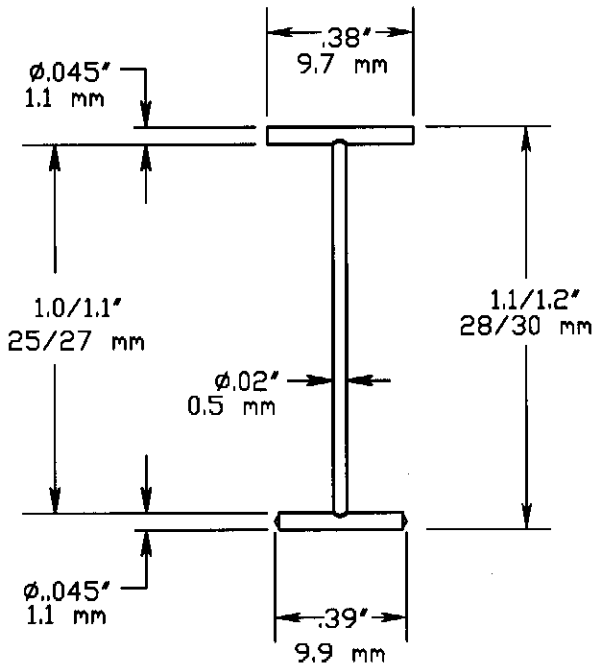

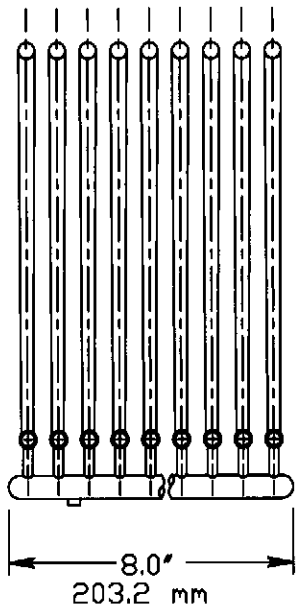

NOT TO SCALE

NOMINAL TENSILE STRENGTH:	5/7 LBSF / 2.3/3.2 KGF
MATERIAL:	NYLON: TYPE 6 - NATURAL
WEIGHT/FASTENER:	0.0010 oz. / 0.029 grams
CLIP QUANTITY:	100
APPLICATION TOOL:	10651 MARK III PISTOL GRIP 08945 STANDARD SCISSOR-GRIP MARK II HAND TOOL (CONTACT LOCAL SALES PERSON FOR INFORMATION ON POWERED EQUIPMENT)
PACKAGED IN:	5,000/CTN., 50,000/CASE
T/F CONN. PADDLES	YES

AVERY DENNISON
FASTENER DIVISION
FITCHBURG, MA 01420 U.S.A.
TEL. 1-800-225-5913
FAX. 1-800-848-2169

DESCRIPTION:

1-1/8" (26mm) Swiftach® HD T-End

APPROVAL:

1-30-09

STOCK NO. 10703

REV C

AVERY DENNISON MARKETING SPECIFICATION

TOLERANCES IN. =± .030 IN.
MM =± 0.7 mm

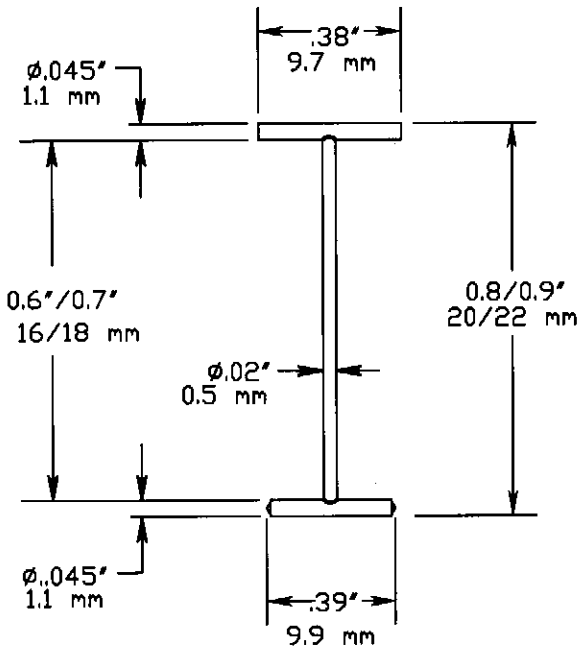

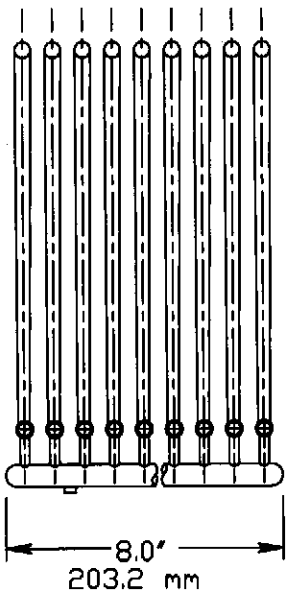

NOT TO SCALE

NOMINAL TENSILE STRENGTH:	5/7 LBSF / 2.3/3.2 KGF
MATERIAL:	NYLON: TYPE 6 - NATURAL
WEIGHT/FASTENER:	0.0010 oz. / 0.029 grams
CLIP QUANTITY:	100
APPLICATION TOOL:	10651 MARK III PISTOL GRIP 08945 STANDARD SCISSOR-GRIP MARK II HAND TOOL (CONTACT LOCAL SALES PERSON FOR INFORMATION ON POWERED EQUIPMENT)
PACKAGED IN:	5,000/CTN., 50,000/CASE
T/F CONN. PADDLES	YES

AVERY DENNISON
FASTENER DIVISION
FITCHBURG, MA 01420 U.S.A.
TEL. 1-800-225-5913
FAX. 1-800-848-2169

DESCRIPTION:

3/4" (17mm) Swiftach® HD T-End

APPROVAL: 1-30-99

STOCK NO. 10704

REV C

AVERY DENNISON MARKETING SPECIFICATION

TOLERANCES IN. =± .030 IN.
MM = ± 0.7 mm

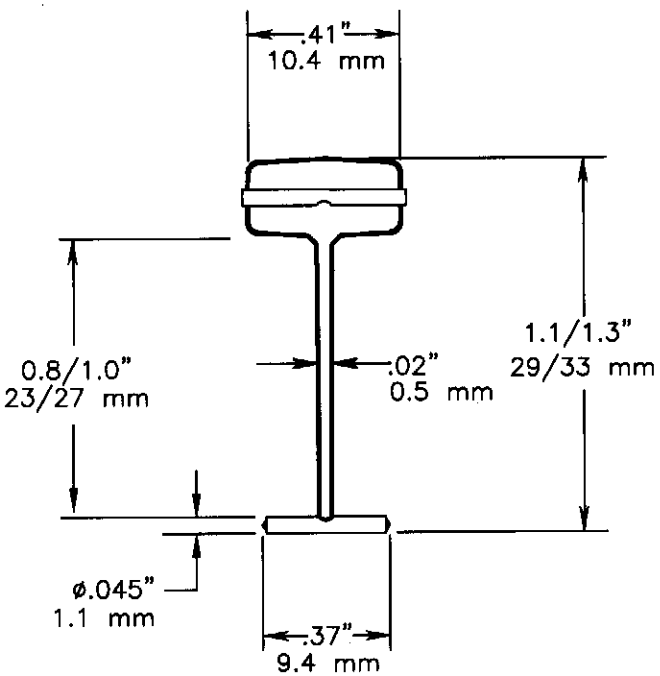

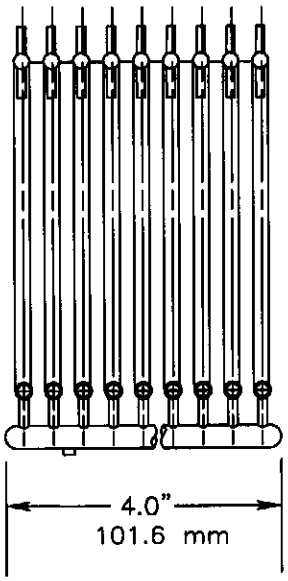

NOT TO SCALE

NOMINAL TENSILE STRENGTH:	4.5/5.5 LBSF. / 2.0/2.5 KGF.
MATERIAL:	POLYPROPYLENE – NATURAL
WEIGHT:	.05 GRAMS/EACH
CLIP QUANTITY:	50
APPLICATION TOOL:	10651 MARK III PISTOL GRIP (CONTACT LOCAL SALES PERSON FOR INFORMATION ON POWERED EQUIPMENT)
PACKAGED IN:	5000/CTN, 50,000/CASE
T/F CONN PADDLES	YES

AVERY DENNISON

FASTENER DIVISION
FITCHBURG, MA 01420 U.S.A.
TEL. 1-800-225-5913
FAX. 1-800-848-2169

DESCRIPTION:

1" (25mm) FILAMENT SWIFTACH®

APPROVAL: 1-30-09

STOCK NO. 11018

REV C

AVERY DENNISON MARKETING SPECIFICATION

TOLERANCES IN. = ± .030 IN.
mm = ± 0.7mm

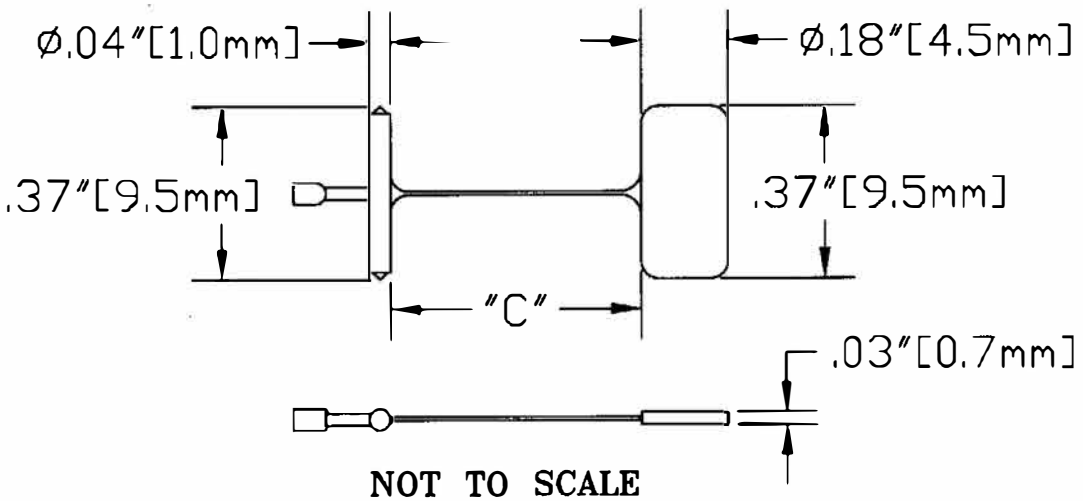

NOT TO SCALE

NOMINAL TENSILE STRENGTH:	5/7 LBSF. / 2.3/3.2 KGF.
MATERIAL:	NYLON - SEE TABLE
PIECES/CLIP:	100
PITCH:	CLOSE
PACKAGED:	10,000/CTN,100,000/CASE
T/F CONN PADDLES:	YES

SKU #	COLOR	"C" DIM.	DESCRIPTION
11077	NATURAL	.57/.61"[14.5/15.5mm]	19/32" [15mm]
		"	"
		"	"
	□	"	"
11081	NATURAL	.77/.80"[19.5/20.5mm]	25/32" [20mm]
		"	"
11083	NATURAL	.96/1.0"[24.5/25.5mm]	1" [25mm]
11084	NATURAL	1.36/1.40"[34.5/35.5mm]	1 3/8"" [35mm]
		"	"
		"	"
	□	"	"
11088	NATURAL	1.95/2.0"[49.5/50.5mm]	2" [50mm]
11089	NATURAL	2.54/2.58"[64.5/65.5mm]	2 1/2" [65mm]

AVERY DENNISON
FASTENER DIVISION
FITCHBURG, MA 01420 U.S.A.
TEL. 1-800-225-5913
FAX. 1-800-848-2169

DESCRIPTION:

SWIFT, HEAVY DUTY, STANDARD

APPROVAL: 1-30-09

STOCK NO. SEE ABOVE

REV D

AVERY DENNISON MARKETING SPECIFICATION

TOLERANCES IN. =± .030 IN.
MM =± 0.7 mm

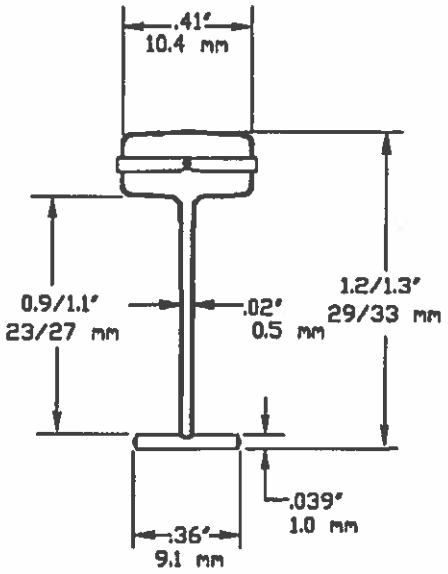

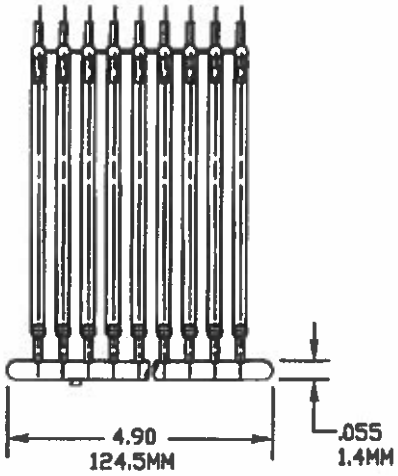

NOT TO SCALE

PART NO.	COLOR
17200-0	DARK BLUE
17201-0	LIGHT BLUE
17202-0	GREEN
17203-0	ORANGE
17204-0	RED
17205-0	YELLOW
17208-0	PINK
17210-0	BLACK

NOMINAL TENSILE STRENGTH:	4.5 – 5.5 LBF / 2.0 – 2.5 KGF
MATERIAL:	POLYPROPYLENE
WEIGHT:	0.035 GRAMS
CLIP QUANTITY:	100
APPLICATION TOOL:	10651 MARK III HAND TOOL (CONTACT LOCAL SALES PERSON FOR INFORMATION ON POWERED EQUIPMENT)
PACKAGED IN:	10,000/CARTON; 100,000 CASE
T/F CONN PADDLES:	YES

AVERY DENNISON

FASTENER DIVISION
FITCHBURG, MA 01420 U.S.A.
TEL. 1-800-225-5913
FAX. 978-353-8157

DESCRIPTION:

1" (25mm) SWIFTACH® PLUS – COLORED

APPROVAL: 08/30/2017

STOCK NO.: SEE TABLE

REV: A

AVERY DENNISON

MARKETING SPECIFICATION DATASHEET

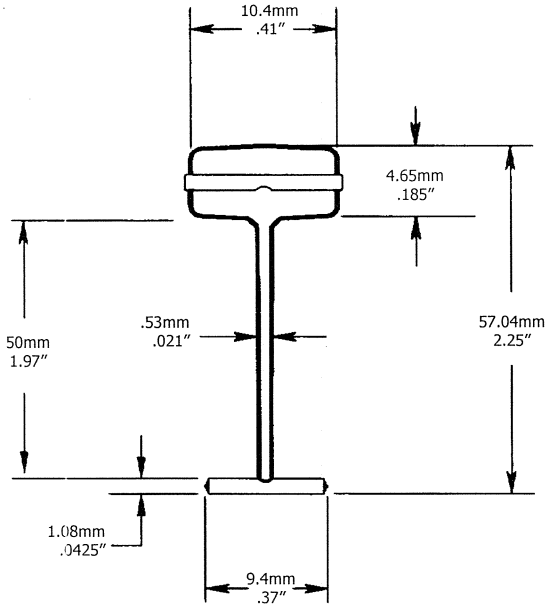

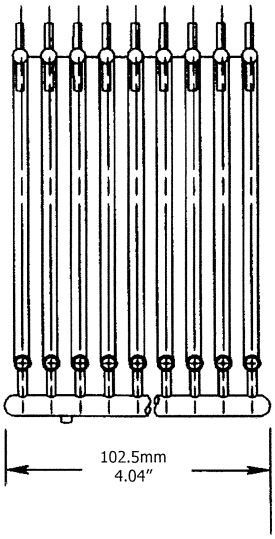

NOT TO SCALE

MIN. APPLIED TENSILE STRENGHT:	4.5 LBSF. / 2 KGF.
MATERIAL:	PP
WEIGHT:	.05 GRAMS / EACH
CLIP QUANTITY:	50
APPLICATION TOOL:	10651 MARK III PISTOL GRIP 08945 STANDARD SCISSOR GRIP MARK II HAND TOOL (CONTACT LOCAL SALES AGENT FOR INFORMATION ON POWERED EQUIPMENT)
PACKAGED IN:	5,000/CTN - 50,000/CASE
T/F CONN PADDLES	YES

AVERY DENNISON™ **Fastener Division**	AVERY DENNISON FASTENER DIVISION 1 THOMAS ROAD WOOBURN INUSTRIAL PARK WOOBURN GREEN BUCKS. HP10 0PE UNITED KINGDOM Tel: +44 (0) 1628 859500 Fax: +44 (0) 1628 859612 fast.info@eu.averydennison.com www.fastener.averydennison.com

DESCRIPTION: 50MM PP SWIFTACH®	APPROVALS:	
	STOCK NO. 02160	REV H

AVERY DENNISON

MARKETING SPECIFICATION DATASHEET

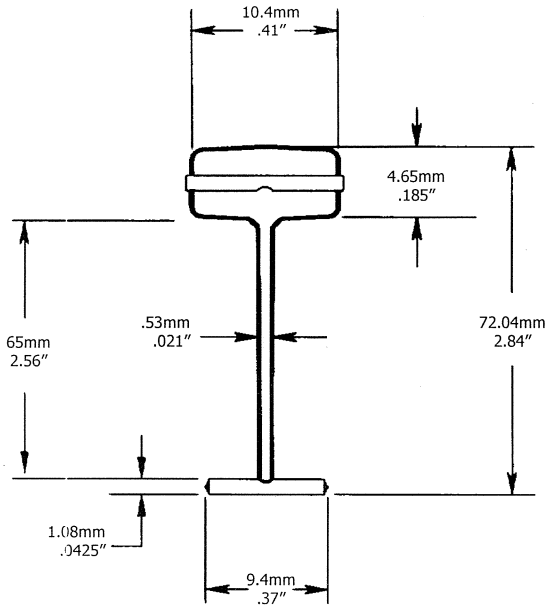

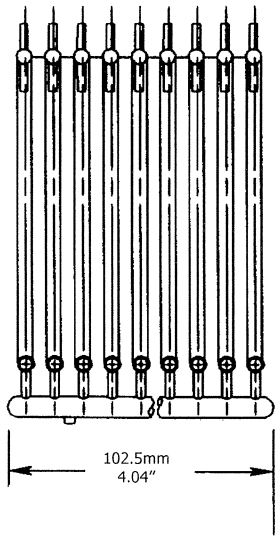

NOT TO SCALE

MIN. APPLIED TENSILE STRENGHT:	4.5 LBSF. / 2 KGF.
MATERIAL:	PP
WEIGHT:	.05 GRAMS / EACH
CLIP QUANTITY:	50
APPLICATION TOOL:	10651 MARK III PISTOL GRIP 08945 STANDARD SCISSOR GRIP MARK II HAND TOOL (CONTACT LOCAL SALES AGENT FOR INFORMATION ON POWERED EQUIPMENT)
PACKAGED IN:	5,000/CTN - 50,000/CASE
T/F CONN PADDLES	YES

AVERY DENNISON™
Fastener Division

AVERY DENNISON
FASTENER DIVISION
1 THOMAS ROAD
WOOBURN INUSTRIAL PARK
WOOBURN GREEN
BUCKS. HP10 0PE
UNITED KINGDOM

Tel: +44 (0) 1628 859500
Fax: +44 (0) 1628 859612
fast.info@eu.averydennison.com
www.fastener.averydennison.com

DESCRIPTION: 65MM PP SWIFTACH®	APPROVALS:	
	STOCK NO. 02161	REV H

AVERY DENNISON MARKETING SPECIFICATION

TOLERANCES IN. =± .030 IN.
MM =± 0.7 mm

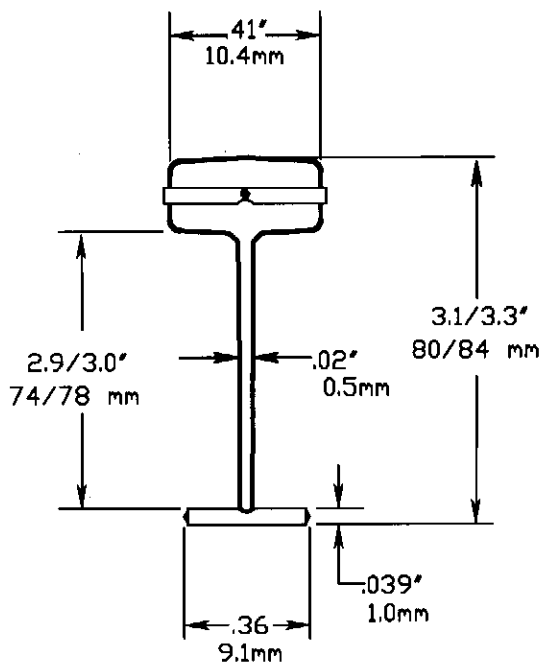

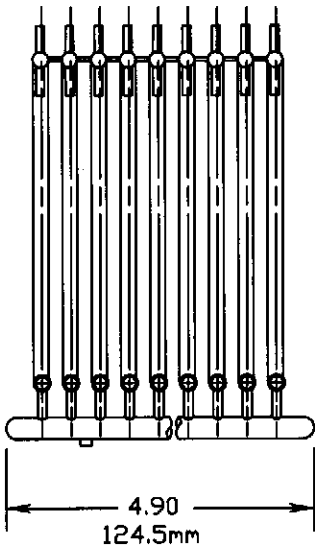

NOT TO SCALE

NOMINAL TENSILE STRENGTH:	4.5 - 5.5 LBSF / 2.0 - 2.5 KGF
MATERIAL:	POLYPROPYLENE - NATURAL
WEIGHT:	0.048 GRAM
CLIP QUANTITY:	100
APPLICATION TOOL:	10651 MARK III HAND TOOL (CONTACT LOCAL SALES PERSON FOR INFORMATION ON POWERED EQUIPMENT)
PACKAGED IN:	10,000/CTN, 100,000/CASE
T/F CONN PADDLES:	YES

AVERY DENNISON

FASTENER DIVISION
FITCHBURG, MA 01420 U.S.A.
TEL. 1-800-225-5913
MA. 978-353-8157

DESCRIPTION:	APPROVAL: 1-12-09	
3" (76mm) SWIFTACH® PLUS	STOCK NO. 10659	REV C